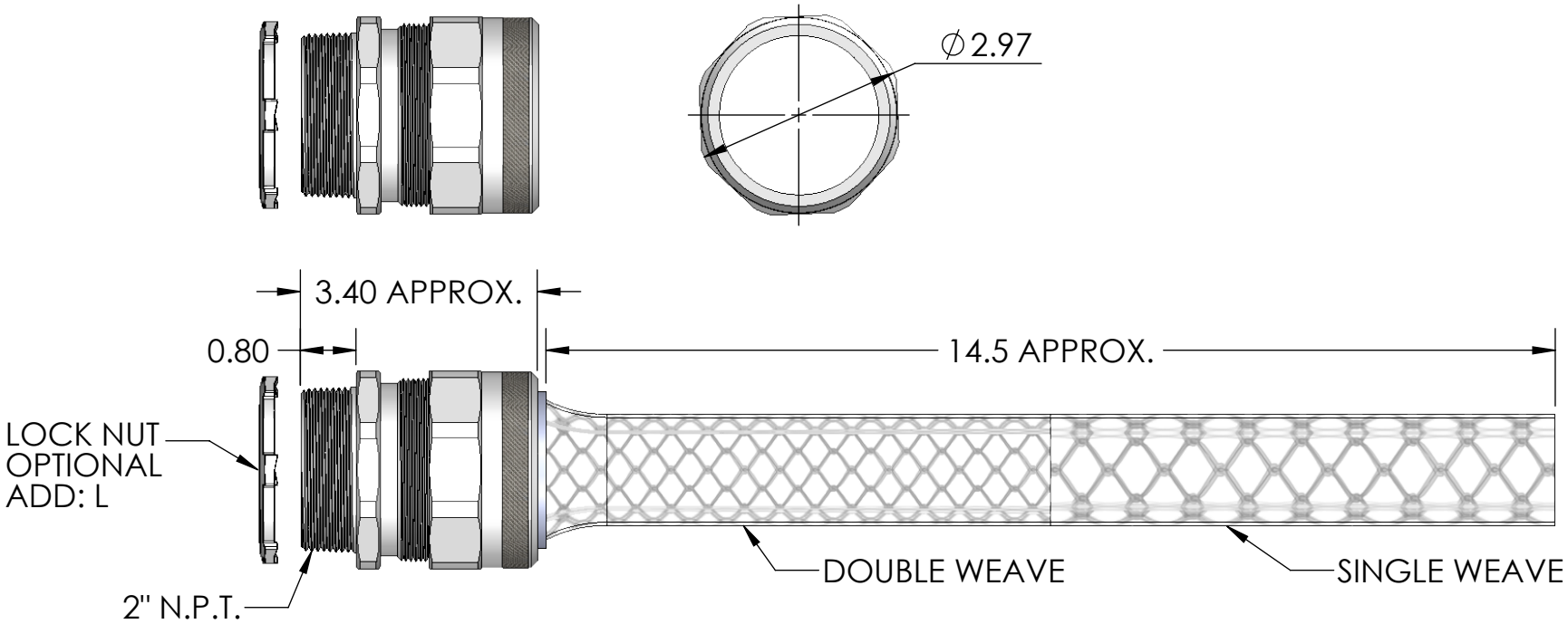

ITEM NO.	PART NUMBER	DESCRIPTION	MATERIAL	QTY.
1	RSR-600-B	BODY	ALUMINUM	1
2	SRB-622-623-625	BUSHING	NEOPRENE	1
3	RSR-600-ND	NUT	ALUMINUM	1
4	R-625-D	MESH	STAINLESS WIRE	1
5	LN-200	LOCKNUT	ADD: L, C.R.S ZINC PLATED	1

RoHS COMPLIANT

CATALOG NUMBER	SEALING RANGE	BODY BORE
RSR-622-E	1.250 - 1.375	2.030
RSR-623-E	1.312 - 1.437	2.030
RSR-625-E	1.438 - 1.562	2.030

REV.	DATE	CHANGE
A	7/9/13	DRAWING RELEASED

UNLESS OTHERWISE SPECIFIED:
DIMENSIONS ARE IN INCHES
TOLERANCES:
FRACTIONAL ± 1/64
ANGULAR: MACH ±1° BEND ±1°
ONE PLACE DECIMAL ±.015
TWO PLACE DECIMAL ±.010
THREE PLACE DECIMAL ±.005

INTERPRET GEOMETRIC TOLERANCING PER:

MATERIAL ALUMINUM

FINISH

DO NOT SCALE DRAWING

	NAME	DATE
DRAWN	JCN	7/13
CHECKED		
ENG APPR.		
MFG APPR.		
Q.A.		

PROPRIETARY AND CONFIDENTIAL

THE INFORMATION CONTAINED IN THIS DRAWING IS THE SOLE PROPERTY OF REMKE INDUSTRIES. ANY REPRODUCTION IN PART OR AS A WHOLE WITHOUT THE WRITTEN PERMISSION OF REMKE INDUSTIRES IS PROHIBITED.

REMKE
REMKE INDUSTRIES
310 CHADDICK DR, WHEELING, IL. 60090

TITLE:
RSR-622-623-625-E SERIES

SIZE A

DWG. NO.
RSR-622-623-625-E ASSEMBLY

SCALE: 1:2.5

SHEET 1 OF 1

5 4 3 2 1