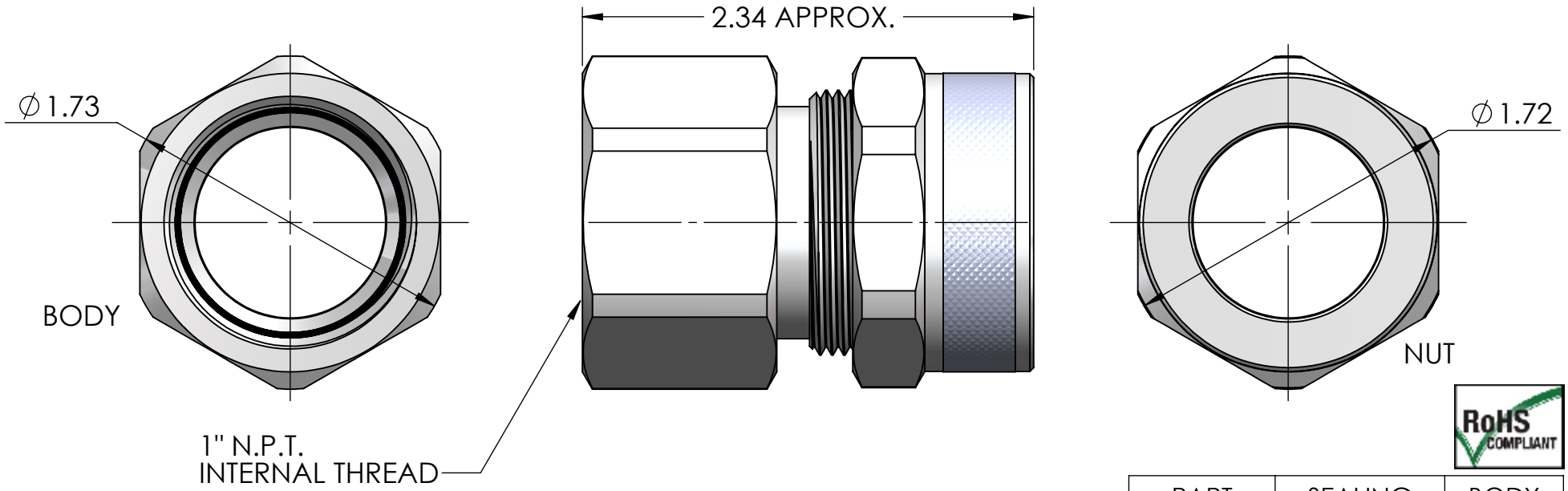

RoHS COMPLIANT

PART NUMBER	SEALING RANGE	BODY BORE
RSRF-309	.500 - .562	1.000
RSRF-310	.500 - .625	1.000
RSRF-311	.562 - .688	1.000
RSRF-312	.625 - .750	1.000
RSRF-313	.688 - .812	1.000
RSRF-314	.750 - .875	1.000
RSRF-315	.812 - .938	1.000
RSRF-316	.875 - 1.000	1.000

ITEM NO.	PART NUMBER	DESCRIPTION	MATERIAL	QTY.
1	RSRF-300-B	BODY	ALUMINUM	1
2	SRB-309 - 316	BUSHING	NEOPRENE	1
3	RSR-300-NB	NUT	ALUMINUM	1
4	SW-300	WASHER	C.R.S. ZINC PLATED	1

REV.	DATE	CHANGE
A	7/1/15	DRAWING RELEASED

UNLESS OTHERWISE SPECIFIED:
DIMENSIONS ARE IN INCHES
TOLERANCES:
FRACTIONAL ± 1/64
ANGULAR: MACH ±1° BEND ±1°
ONE PLACE DECIMAL ±.015
TWO PLACE DECIMAL ±.010
THREE PLACE DECIMAL ±.005

INTERPRET GEOMETRIC TOLERANCING PER:

MATERIAL

FINISH

DO NOT SCALE DRAWING

	NAME	DATE
DRAWN	JCN	7/15
CHECKED		
ENG APPR.		
MFG APPR.		
Q.A.		

PROPRIETARY AND CONFIDENTIAL

THE INFORMATION CONTAINED IN THIS DRAWING IS THE SOLE PROPERTY OF REMKE INDUSTRIES. ANY REPRODUCTION IN PART OR AS A WHOLE WITHOUT THE WRITTEN PERMISSION OF REMKE INDUSTIRES IS PROHIBITED.

REMKE
REMKE INDUSTRIES
310 CHADDICK DR, WHEELING, IL. 60090

TITLE:
RSRF-300-SERIES

SIZE A
DWG. NO. RSRF-300- ASSEMBLY

SCALE: 1.25:1
SHEET 1 OF 1

5 4 3 2 1

T:\Solidworks Files\Assymblies (Customer Drawings)\ALUM\RSRF ASSEMBLYS\DRW\